CZM
FOUNDATION EQUIPMENT

EK260LS

ON CAT352 TIER IV

APPLICATIONS

The EK260LS is a full cable crowd drilling rig mounted on a CAT352. The long stroke of the rotary makes it ideal for:

- Cased kelly bar drilling with segmented (European style) casing, specially for Secant walls.
- Large Diameter CFA.
- Displacement piles.
- Cased CFA with a double rotary for Secant walls.
- Large diameter single column Soil Mixing.

KELLY BAR
Max Depth (Std.): 130 ft / 39.6 m
Diameter (without lower mast): 12 ft / 3,700 mm
Diameter (with lower mast.): 10 ft / 3,050 mm

CONTINUOUS FLIGHT AUGER PILE
Depth (max.): 93 ft / 28.5 m
Diameter (max.): 48 in / 1,200 mm

DISPLACEMENT PILE
Depth (max.): 93 ft / 28.5 m
Diameter (max.): 24 in / 620 mm

CASED CFA
Depth (max.): 66 ft / 20.2 m
Diameter (max.): 36 in / 920 mm

SOIL MIXING
Depth (max.): 66 ft / 20.2 m
Diameter (max.): 10 ft / 3,050 mm
Diameter (with lower mast.): 91 in / 2,300 mm

TECHNICAL SPECIFICATIONS

ROTARY HEAD		
Maximum torque (nominal)	209,800lbf.ft	29,085kgf.m
Working Speed	14 - 26rpm	14 - 26rpm
Spin-off Speed	70-110rpm	70-110rpm
CROWD SYSTEM		
Pull down/Pull up force (nominal)	98,000lbf	44,700kgf
Pull down/Pull up force (effective)	83,725lbf	38,000kgf
Standard Rotary Stroke	61ft	18,600mm
Max. Rotary Stroke (w/ 2mts Mast Extension)	67.6ft	20,600mm
Cable Diameter	1in	26mm
Speed (down/up)	25ft/min	7.5m/min
Fast Speed (down/up)	115ft/min	35m/min
MAIN WINCH (PULL-UP)		
Max. Pull-force effective (1st layer)	63,700lbf	28,955kgf
Line speed (1st layer)	240ft/min	73m/min
Cable diameter	1 1/8 in	28mm
Drum pitch diameter (1st Layer)	22in	560mm
AUXILIARY WINCH		
Max. Pull-force effective (1st layer)	22,000lbf	10,000kgf
Cable diameter	3/4 in	19mm
Drum pitch diameter (1st Layer)	16.7in	442mm
MAST INCLINATION		
Backward	15°	15°
Forward	5°	5°
Sideways	5 / 5°	5 / 5°
DIESEL ENGINE CAT352 TIER IV (CAT C13 ACCERT)*		
Exhaust Emission Standard	EPA Tier 4 Interim	EPA Tier 4 Interim
Gross Power - SAE JI995	432hp	322kW
Displacement	763in³	12.5L
Fuel tank	190gal	720L
MAIN HYDRAULIC SYSTEM		
Main circuit pressure (max.)	5,076psi	350bar
Main circuit Flow rate (max.)	180gpm	680lpm
Hydraulic Oil Tank (CAT + Additional)	177gal	670L
AUXILIARY HYDRAULIC SYSTEM		
Pump Displacement	3,66in³	60cc³
Auxiliary circuit flow rate (max.)	29gpm	108lpm
UNDERCARRIAGE		
Track length	21ft 2in	6,440mm
Length to center of rollers	17ft 10in	5,440mm
Transport position width (retracted)	11ft 6in	3,500mm
Operation position width (extended)	16ft 5in	5,000mm
Track shoes width	35in	900mm
GENERAL DATA STANDARD MAST APPLICATION		
Overall Height (Working position)	87ft 1in	26,800mm
Operation Weight	200,000lb	90,900kg

Specifications are subject to change without notice.

KELLY BAR GENERAL DIMENSIONS

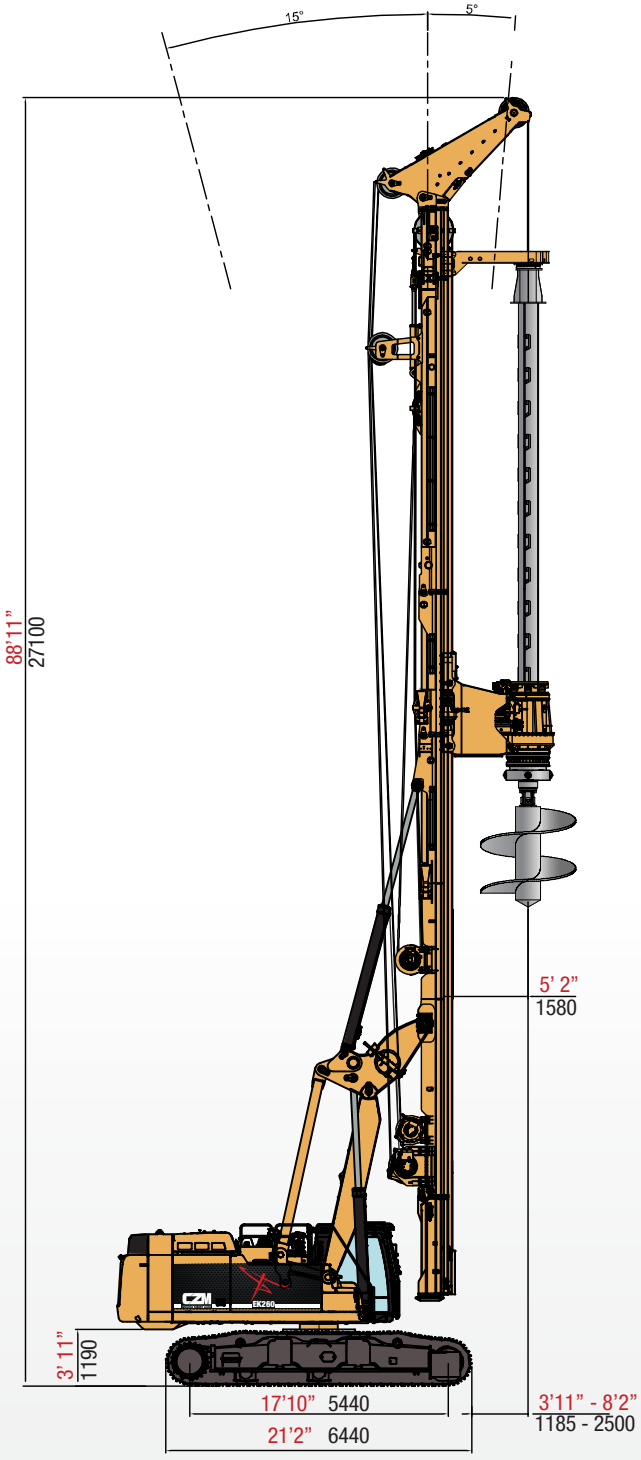

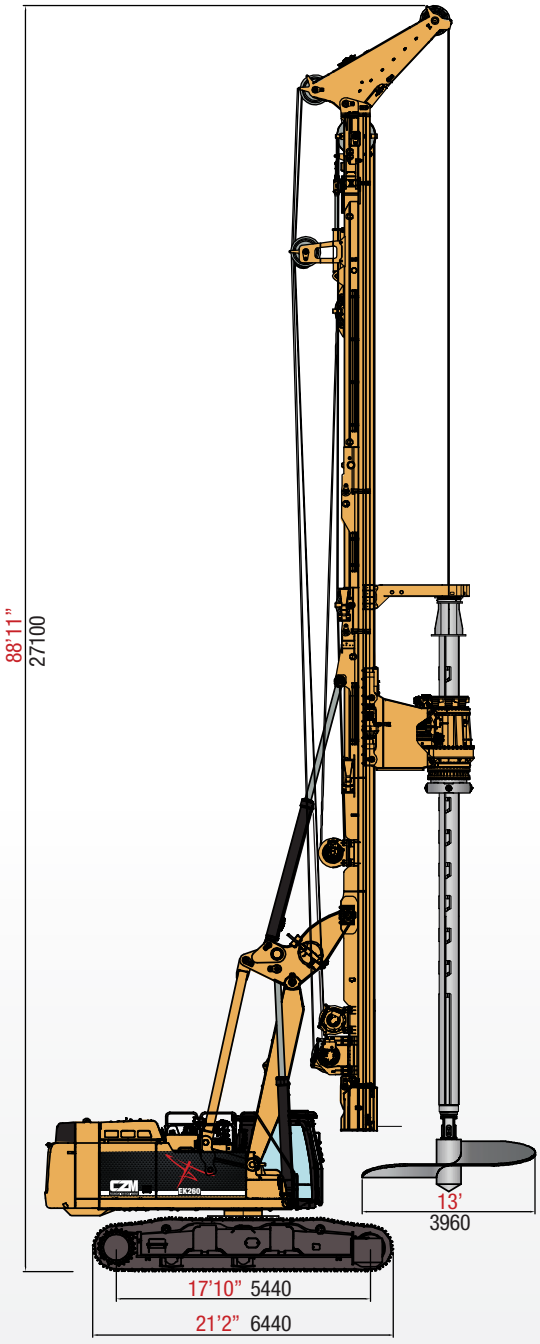

KELLY BAR STANDARD MAST APPLICATION SPECS

Std. drilling depth (interlocking kelly bar)	130 ft	39,600 mm
Max. drilling depth (interlocking kelly bar)	250 ft	75,000 mm
Max. drilling diameter (without lower mast)	12 ft	3,700 mm
Max. drilling diameter (with lower mast)	10 ft	3,050 mm

KELLY BAR GENERAL DIMENSIONS

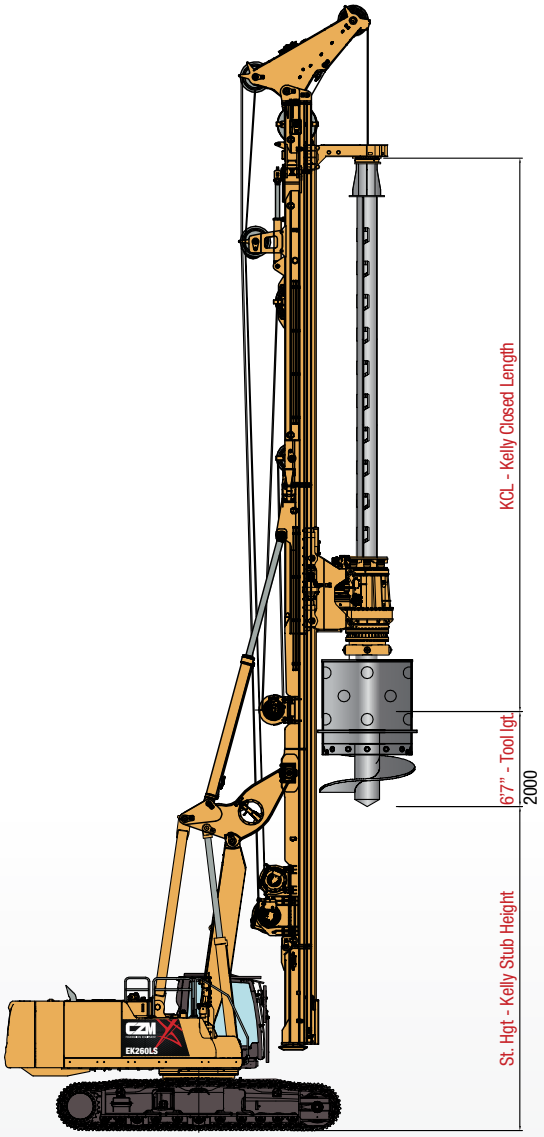

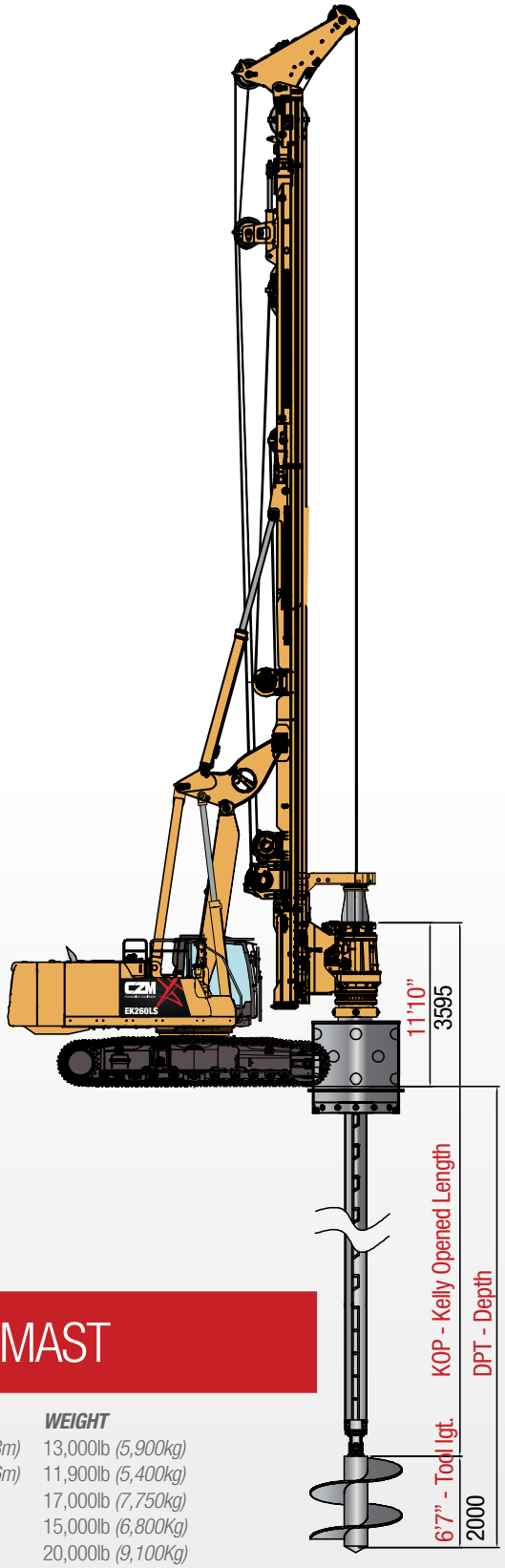

KELLY BAR OPTIONS FOR STANDARD MAST

	NUMBER OF ELEMENTS	DEPTH - DPT [4]	TRANSPORT - KCL [1]	HGT [3]	KOP [2]	WEIGHT
Standard 4/130 Interlock	4	130ft *(39m)*	39ft *(11.9m)*	25ft *(7.6m)*	132ft 3in *(40.3m)*	13,000lb *(5,900kg)*
3/90 Interlock	3	90ft *(29m)*	39ft 4in *(12m)*	25ft *(7.6m)*	100ft 5in *(30.6m)*	11,900lb *(5,400kg)*
Long 4/175 Interlock	4	175ft *(53m)*	50ft 7in *(15.4m)*	13ft 6in *(6.1m)*	178ft *(54.3m)*	17,000lb *(7,750kg)*
Long 3/130 Interlock	3	130ft *(39m)*	50ft 7in *(15.4m)*	13ft 6in *(6.1m)*	133ft *(40.5m)*	15,000lb *(6,800Kg)*
4/200 Interlock	4	200ft *(60m)*	60ft 8in *(18.5m)*	3ft 4in *(1m)*	206ft *(6m)*	20,000lb *(9,100Kg)*
5/260 Interlock	5	260ft *(79.3m)*	59ft 9in *(18.2m)*	12ft 2in *(3.7m)*	264ft *(80.6m)*	32,500lb *(14,700Kg)*

The standard kelly has 4 interlocking elements and reaches 130 ft *(39 m)* depth.

*3m (9ft 10in) Mast Extension can be added to increase clearance.

CONTINUOUS FLIGHT AUGER

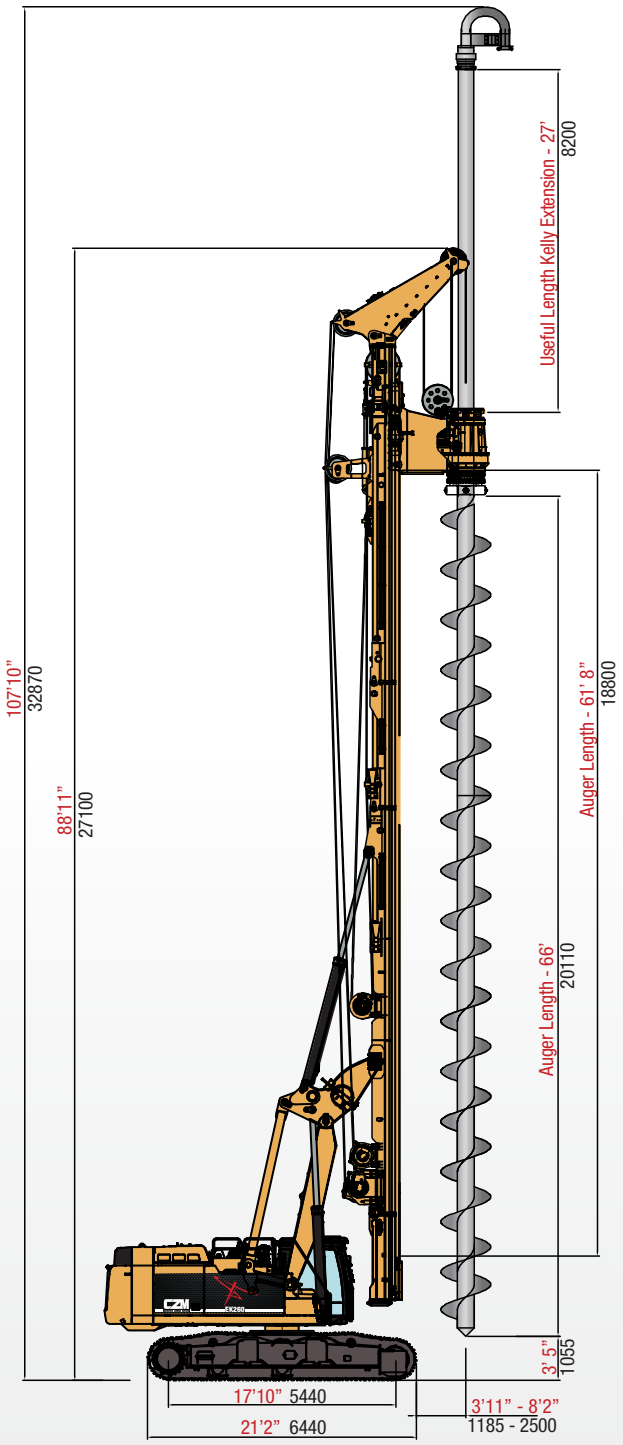

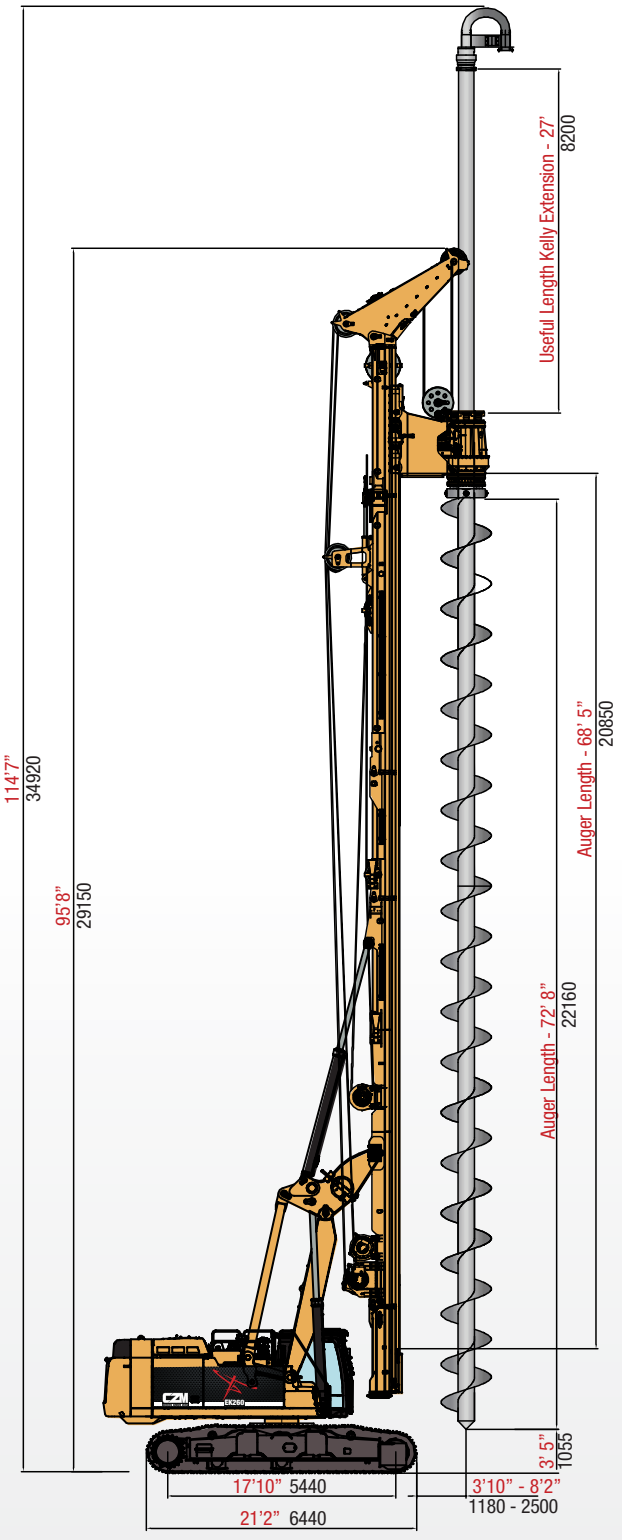

CFA APPLICATION SPECS

Max. drilling diameter	48 in	1,200 mm
Max. drilling depth (Standard Mast)	87 ft	26,500 mm
Max. drilling depth (w/ 2mts Mast Extension)	93 ft	28,500 mm
Max. extraction force (Main + Crowd winch)	211,125 lbs	95,910 kgf

DISPLACEMENT PILE

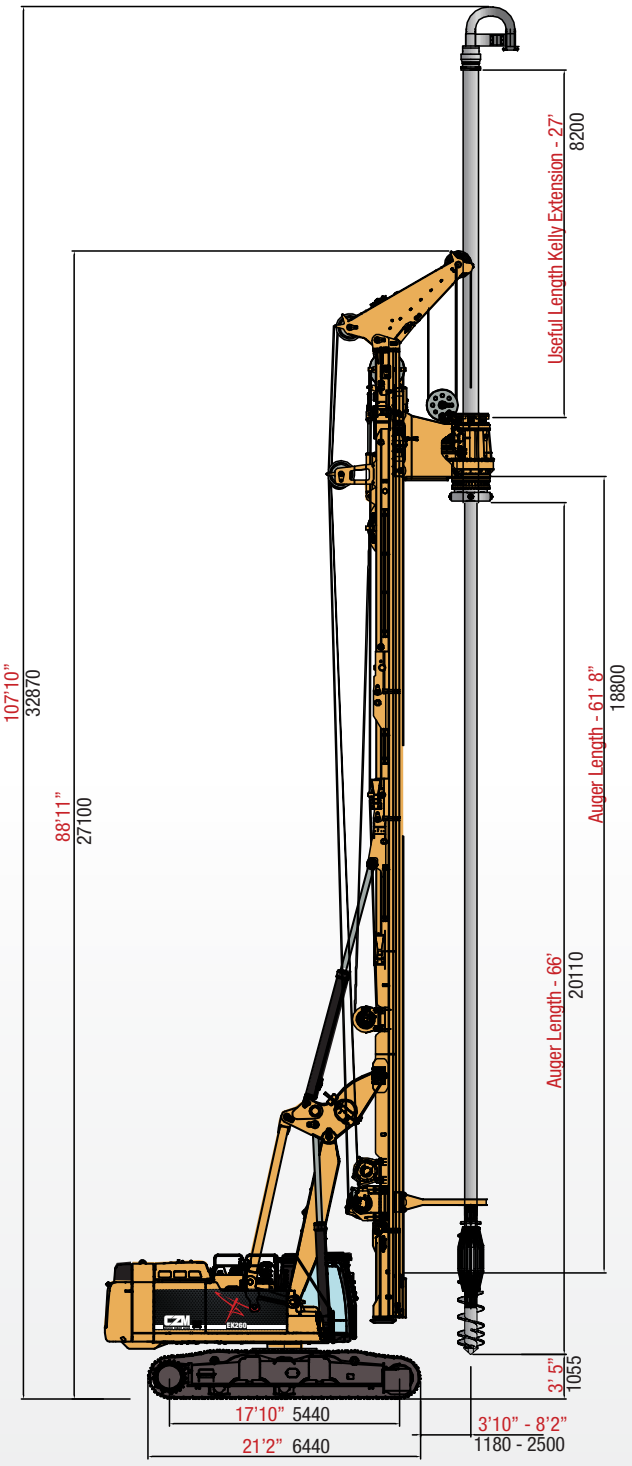

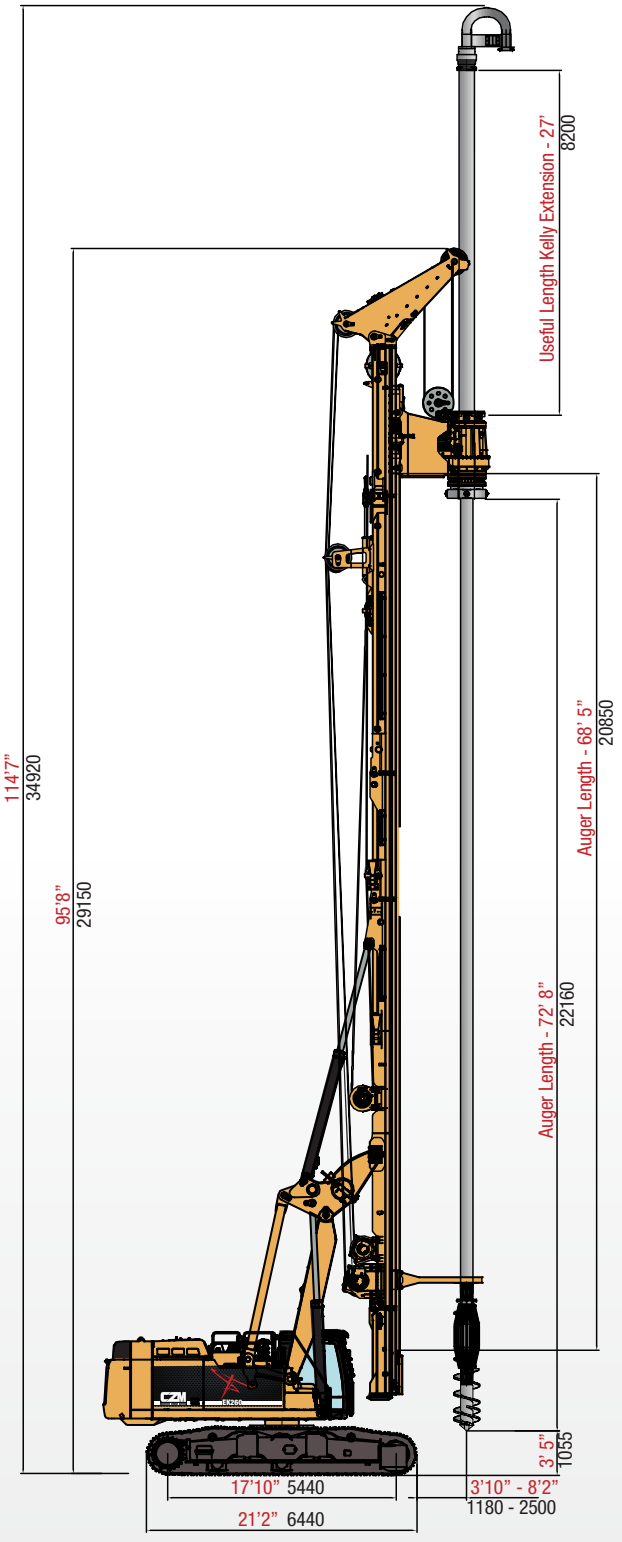

DISPLACEMENT PILE APPLICATION SPECS

Max. drilling diameter	24 in	620 mm
Max. drilling depth (Standard Mast)	87 ft	26,500 mm
Max. drilling depth (w/ 2mts Mast Extension)	93 ft	28,500 mm
Max. extraction force (Main + Crowd winch)	211,125 lbs	95,910 kgf

CASED CFA - DOUBLE ROTARY

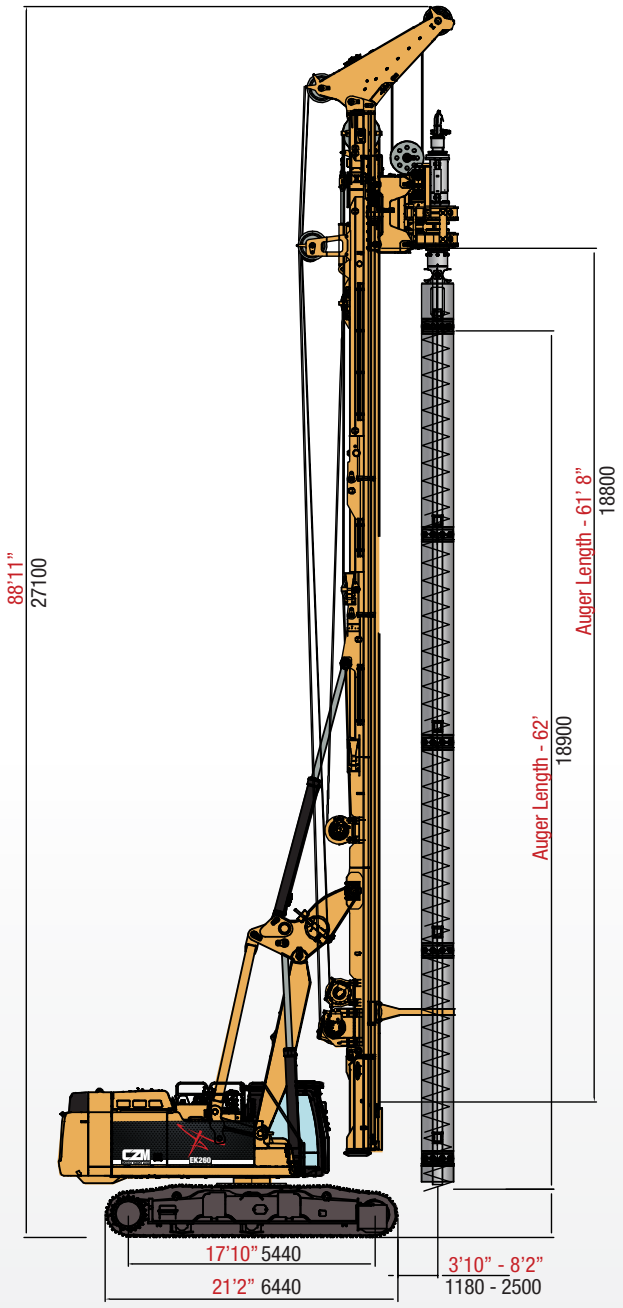

CASED CFA APPLICATION SPECS

Casing Rotary head Max torque	155,080 ft.lbs	21,500 kg.m
Auger Rotary head Max torque	101,400 ft.lbs	14,000 kg.m
Max. drilling diameter	36 in	920 mm
Max. drilling depth (Standard Mast)	60 ft	18,200 mm
Max. drilling depth (w/ 2mts Mast Extension)	66 ft	20,200 mm
Max. extraction force (Main + Crowd winch)	211,125 lbs	95,910 kgf

SOIL MIXING

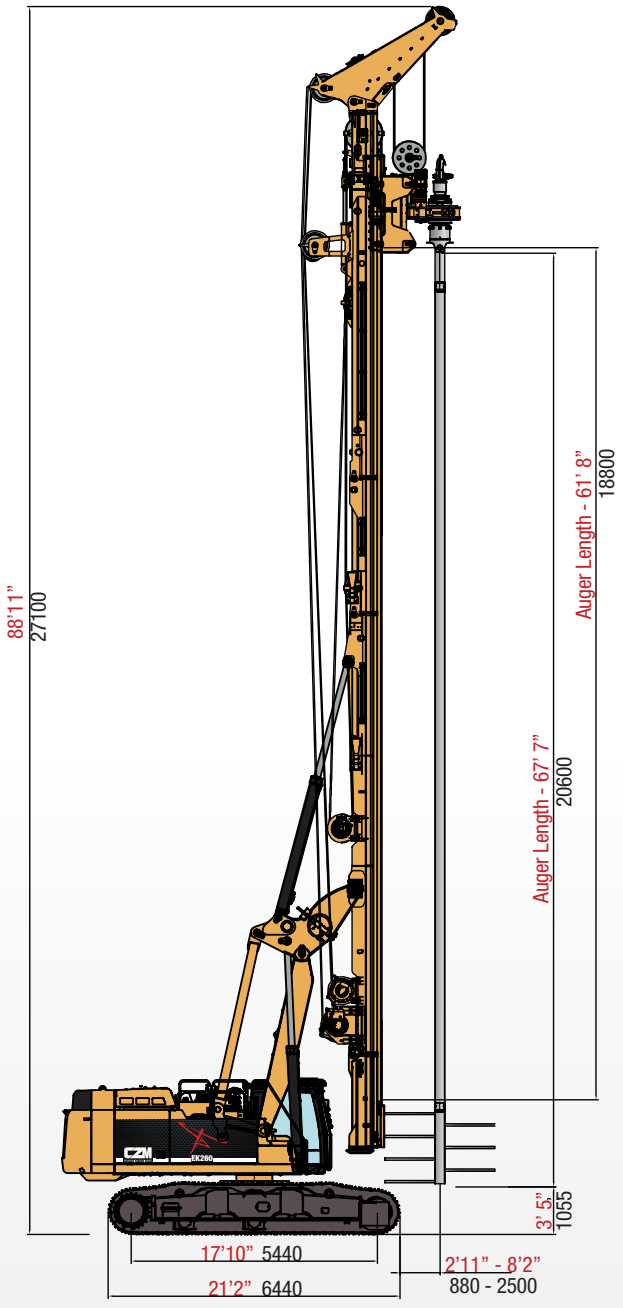

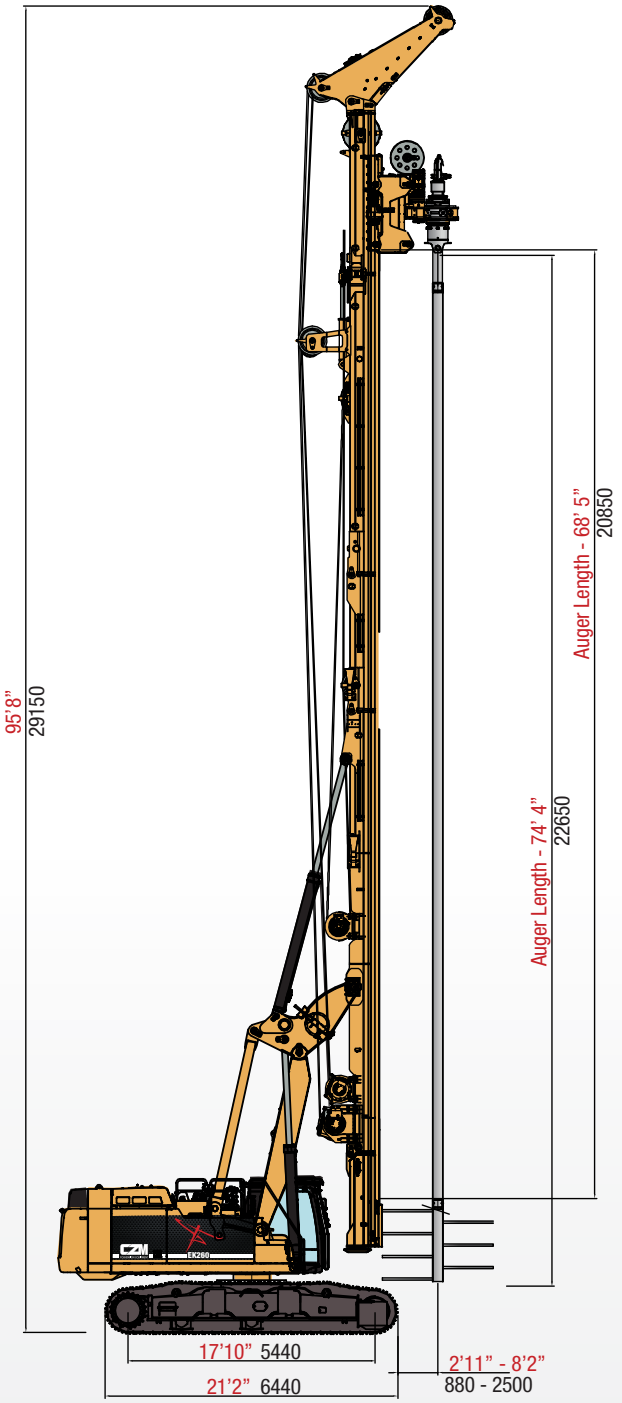

SINGLE COLUMN SOILMIXING APPLICATION SPECS

Soilmixing Rotary head Max torque	155,080 ft.lbs	21,500 kg.m
Soilmixing Rotary Head Speeds	20 – 40 rpms	20 – 40 rpms
Max. drilling diameter	10 ft	3,050 mm
Max. drilling depth (Standard Mast)	60 ft	18,200 mm
Max. drilling depth (w/ 2mts Mast Extension)	66 ft	20,200 mm
Max. extraction force (Main + Crowd winch)	211,125 lbs	95,910 kgf

TRANSPORT POSITION GENERAL DIMENSIONS

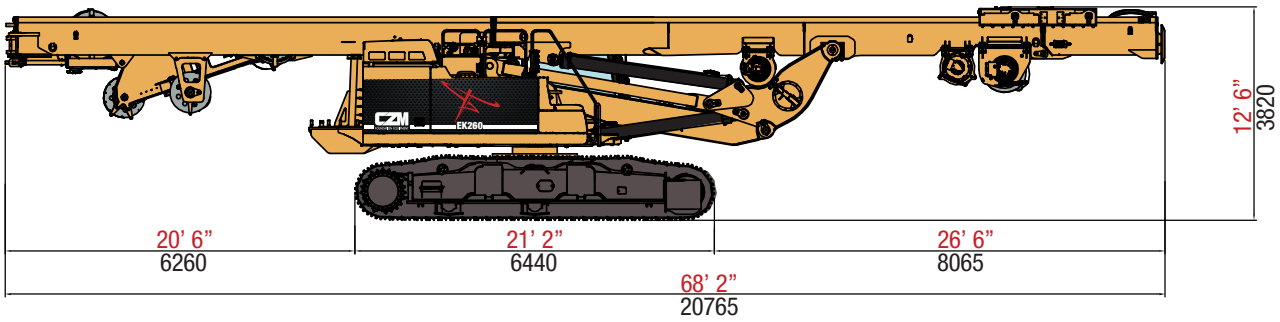

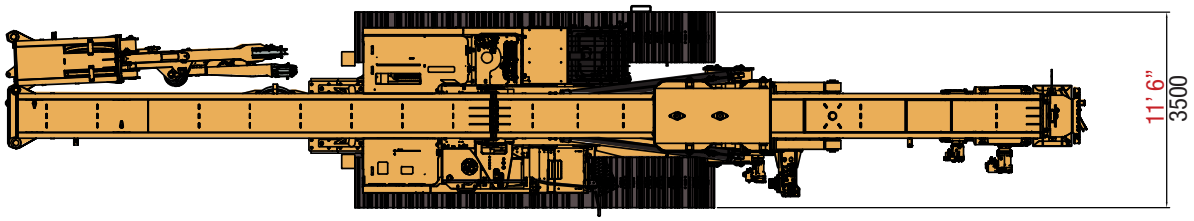

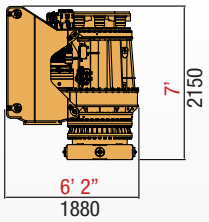

Width: 6' 4" / 1930
Weight: 12,000lb / 5.5 ton

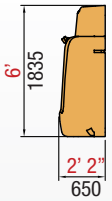

Width: 9' 10" / 3000
Weight: 27,000lb / 12.3 ton

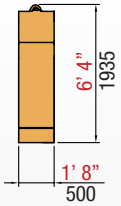

Width: 9' 10" / 3000
Weight: 4,000lb / 1.8 ton

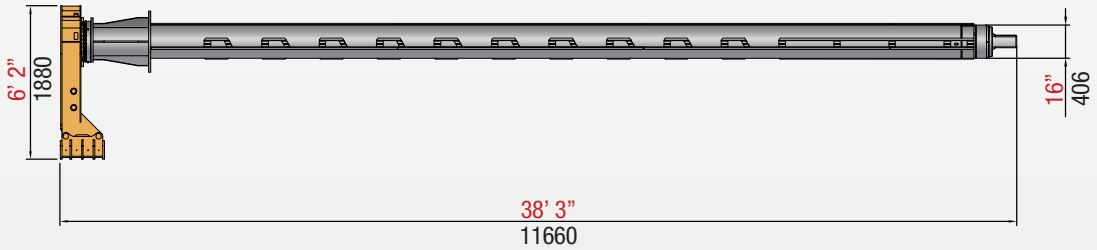

Weight: 13,500lb / 6.2 ton

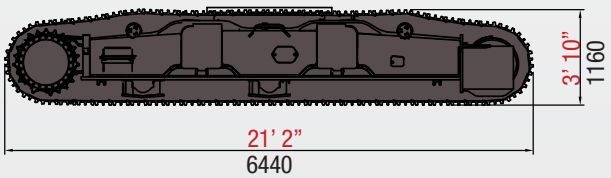

Width: 3' / 900
Weight: 20,000lb / 9.1 ton

EK260LS FEATURES

BASE:

- The new **Cat 352** is a purpose-built machine powered by a fuel-efficient U.S. EPA **Tier 4 Final** C13 ACERT engine.
- Equipped with **CAT Vision Link** that allows management to monitor machine operations and maintenance data online and wireless, providing information such as location, hours, fuel usage, idle time, event codes and maintenance schedule.

UNDERCARRIAGE:

- Caterpillar **variable undercarriage** VH5440/4900/900. Reinforced frame H style variable undercarriage. Length between wheels 5440mm, Transport width 3500mm, Operation width 4900mm, Shoe width 900mm.

MAST:

- Reinforced mast, with high resistance steel **Weldox 700**.

ROTARY:

- **Robust design**, with 2 slewing bearings on top and bottom, robust pinion and main gear.
- **3 groups of Hydraulic Motor / Planetary Gears for high torque and long life.**
- Anti-cavitation and anti-shock system for longer hydraulic motor life.
- Cooling system for hydraulic motors and gearboxes.
- Power-shift for **High spin-off speed (110rpm)** for quick discharge of soil.
- **3 operation speeds** and 3 spinoff speeds. For high torque and high speeds.
- **Automatic gear shifting**, for seamless operation, high production.
- **Exchangeable keys**, bolted. No need to rebuild keys by welding inside the rotary.
- Hydraulic measurement of torque displayed in the cabin for the operator.

MAIN WINCH:

- **Special groove** for better cable winding and longer cable life.
- Press-roller included
- **2 gears** allows for both **high speed** and **high pulling force**.
- **Automatic gear shifting**, for seamless operation, high production.
- Automatic down the hole winch stop. When Kelly bar reaches the bottom of the hole, winch automatic stops.
- Free willing winch during crowd operation.
- Hydraulic and mechanic brake.
- Hydraulic measurement of pulling force displayed in the cabin for operator.
- Swivel and Limit switch.

CAB:

- AM/FM Radio, Air conditioning/Heating
- ROPS cab
- Top protection
- LCD monitor for Engine and Hydraulics computer, with diagnostic system

CONTROL SYSTEM:

- Touch Screen Display
- Measurements:
  - Torque and rotary speeds
  - Drilling depth
  - Mast inclination X/Y axis
  - Main Winch pulling force
  - Crowd force
- Automatic functions:
  - Auto-level of mast
  - Rotary automatic gear shifting
  - Main Winch automatic gear shifting
- Maintenance and data logging

ACCESSORIES:

- Lighting package
- Refueling pump
- Cold weather start up package
- Fine filtration system
- Tool & O'ring kits

CZM FOUNDATION EQUIPMENT

THE COMPANY

CZM is headquartered in Savannah, Georgia, USA. For over 40 years, we have specialized in manufacturing foundation equipment. We design and customize models for many different drilling applications including Drill shafts, CFA/cased CFA, Micropile and anchoring, piledrive and hydraulic hammers and soil improvements. We are a Caterpillar OEM (Original Equipment Manufacturer).

HEADQUARTERS
962 Interstate Centre Boulevard
Ellabell • Georgia • 31308
United States • Phone: (912) 200-7654

AFTER SALES - GEORGIA
145 East Industrial Boulevard
Pembroke • Georgia • 31321
United States • Phone: (912) 200-7656

AFTER SALES - TEXAS
2501 Blue Mound Rd. W
Haslet • Texas • 76052
United States • Phone: (817) 232-8053

WWW.CZM-US.COM

Specifications are subject to change without notice.